EN 64100659

V01

QUICK INSTALLATION GUIDE

SMILE-G3-Backup Box-S23

1.0 Transport

During transportation, please follow these guidelines:
1. The original packaging should be used for transportation.
2. Handle with care, choose the corresponding handling method according to the weight, and pay attention to safety.

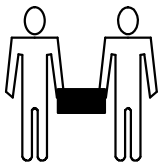

2.0 Instructions

2.1 Dimensions

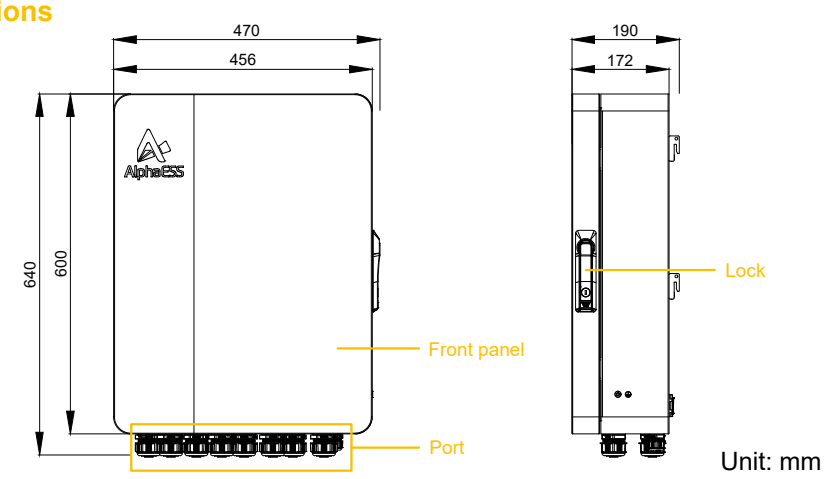

Unit: mm

2.2 Installation Space Requirements

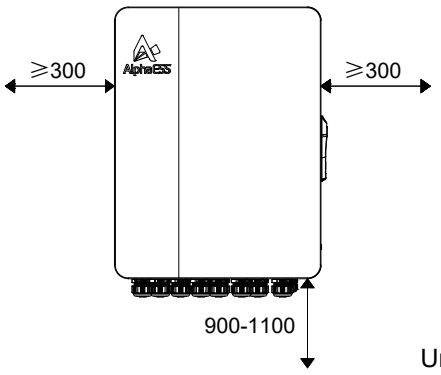

Unit:mm

2.3 Product Overview

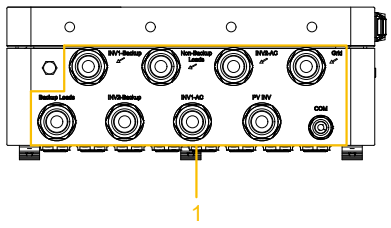

(1) Wiring Port
(2) INV1-Backup Switch
(3) INV2-Backup Switch
(4) PV INV Switch
(5) SPD
(6) Backup Loads Switch
(7) Non-Backup Loads Switch
(8) INV1-AC Switch
(9) INV2-AC Switch
(10) Grid Switch
(11) SPD Switch
(12) Terminal Block of Backup Loads
(13) Nylon Screw Plugs
(14) Grounding Copper Bar
(15) Communication Board
(16) Terminal Block of PV INV
(17) Terminal Block of INV2-Backup
(18) Terminal Block of INV1-Backup

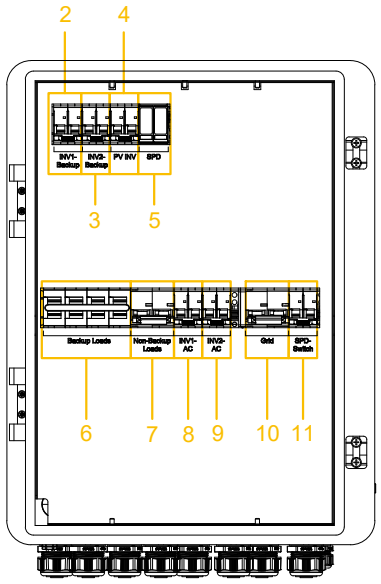

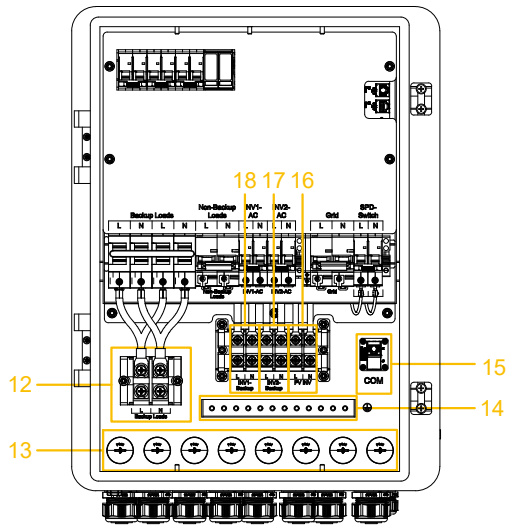

3.0 Accessories and Installaton Tools

3.1 Scope of Delivery

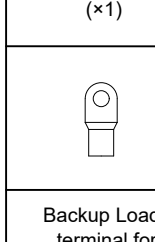	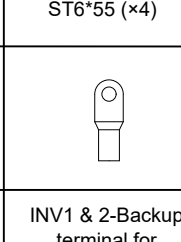	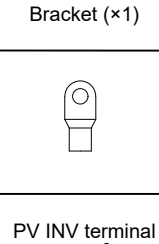	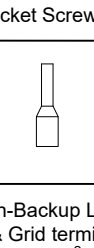	
Backup Box (×1)	Wall Anchor ST6*55 (×4)	Wall Mount Bracket (×1)	M5 × 12 Wall Mount Bracket Screw (×3)	Keys (×2)
Backup Loads terminal for 25 mm² (×3)	INV1 & 2-Backup terminal for 16 mm² (×5)	PV INV terminal for 10 mm² (×3)	Non-Backup Loads & Grid terminal for 25 mm² (×5)	INV1 & INV2-AC terminal for 16 mm² (×5)

			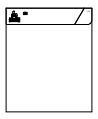	
Grounding terminal for 16 mm² (×9)	M5 × 10 Grounding Screw (×12)	Wing nut (×1)	Documentation (×1)	

3.2 Installation Tools

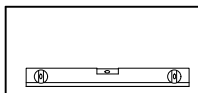		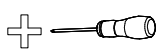	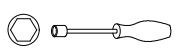	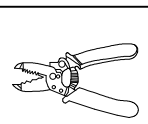
Spirit Level	T20 Screwdriver	PH2 / PH3 Phillips Screwdriver	SW8 Screwdriver	Wire Strippers
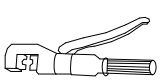		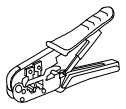	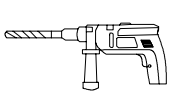	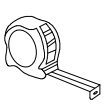
Crimping Plier	Terminal Crimping tool	Backup Loads terminal for 25 mm² (×3)	Hammer Drill, Bit Ø10	Tape Measure
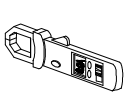	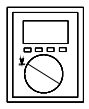			
Current Clamp	Multimeter			

4.0 Installation

4.1 Mounting Location Requirements

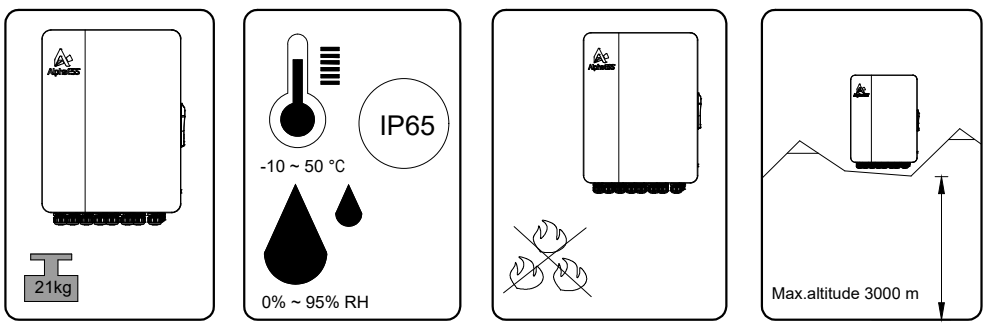

4.2 Installing the Product

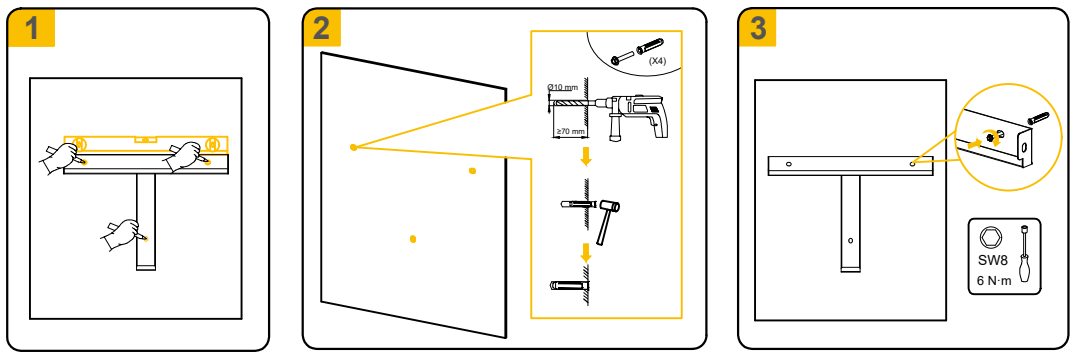

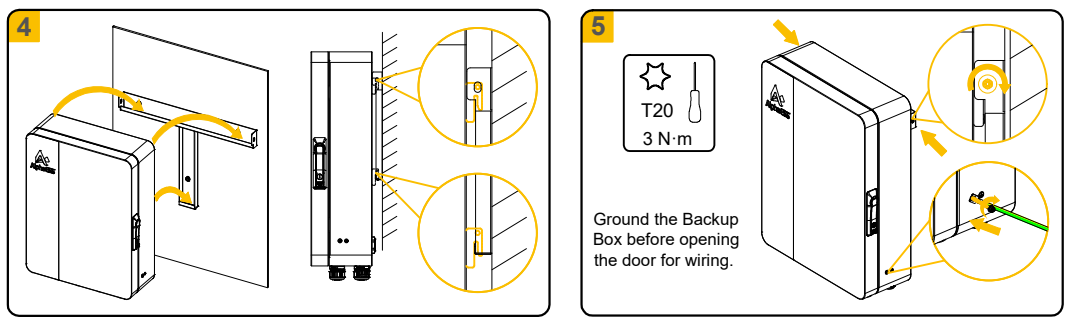

4.3 Opening Equipment Door

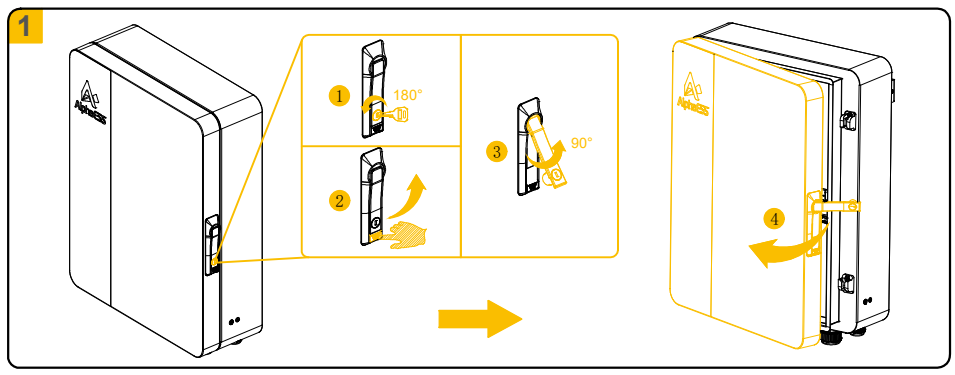

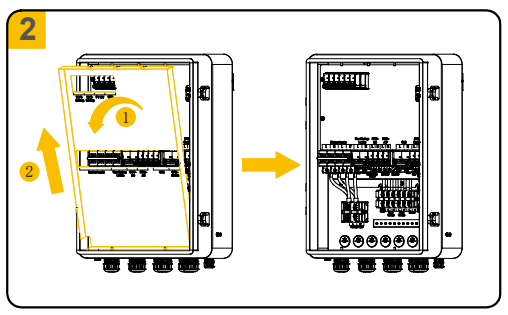

4.4 Closing Equipment Door

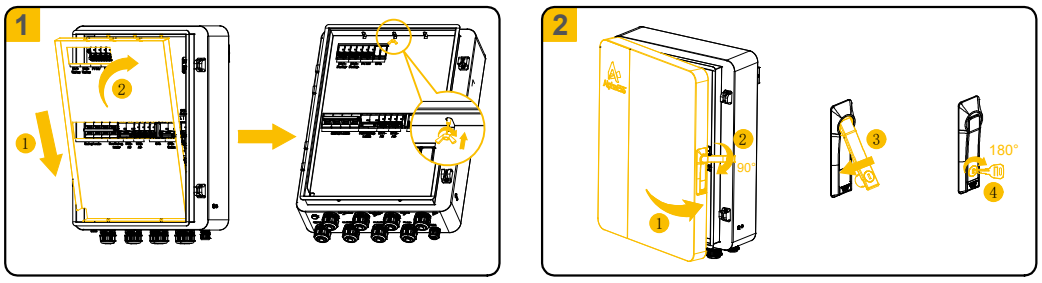

4.5 Electrical Connection

4.5.1 Electrical Connection of terminal block

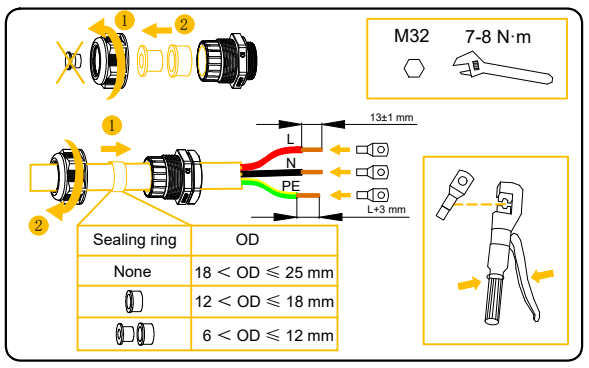

Sealing ring	OD
None	18 < OD ⩽ 25 mm
	12 < OD ⩽ 18 mm
	6 < OD ⩽ 12 mm

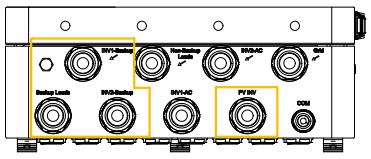

Functional Description	Maximum current allowed to pass through	Recommended maximum Cable
Backup Loads	100 A	25 mm²
INV1-Backup	63 A	16 mm²
INV2-Backup	63 A	16 mm²
PV-INV	32 A	10 mm²

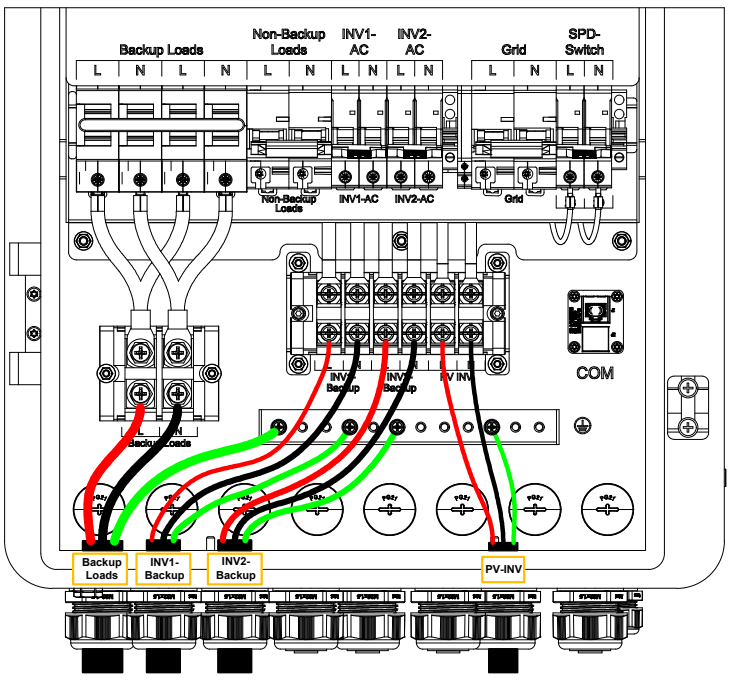

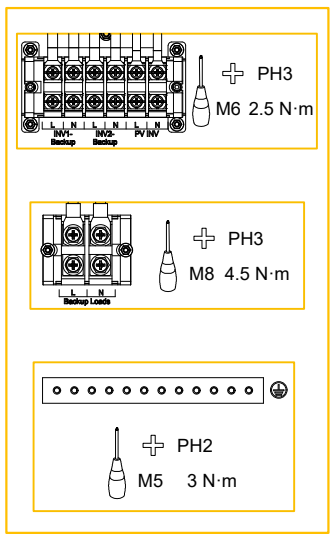

4.5.2 Electrical Connection of Switch

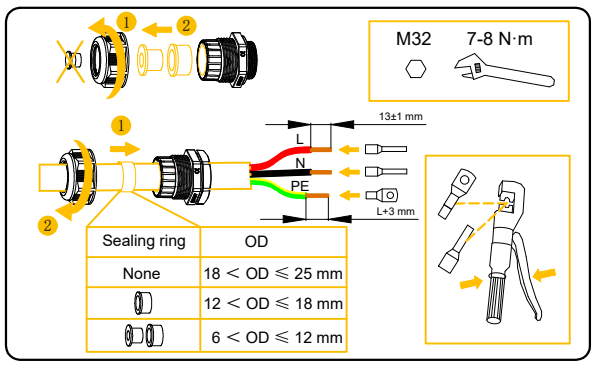

Sealing ring	OD
None	18 < OD ⩽ 25 mm
	12 < OD ⩽ 18 mm
	6 < OD ⩽ 12 mm

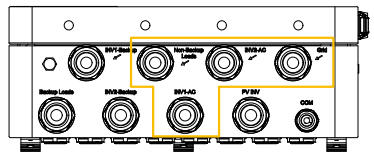

Functional Description	Maximum current allowed to pass through	Recommended maximum Cable
Non-Backup Loads	100 A	25 mm²
INV1-AC	63 A	16 mm²
INV2-AC	63 A	16 mm²
Grid	100 A	25 mm²

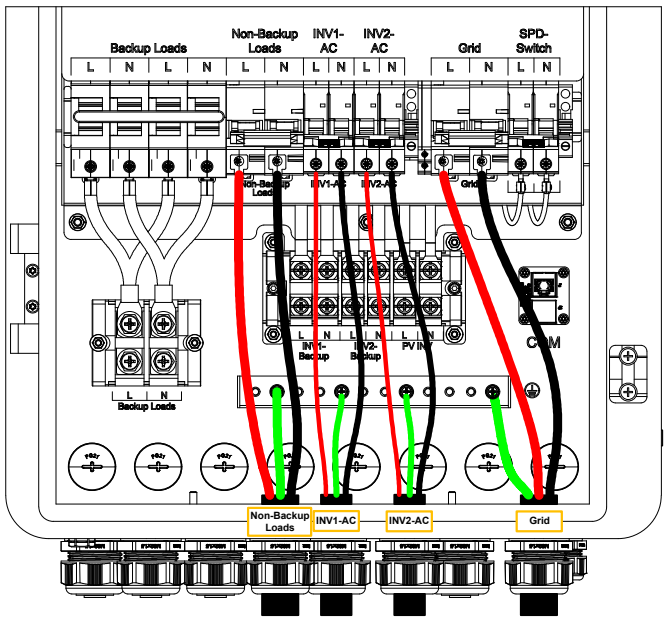

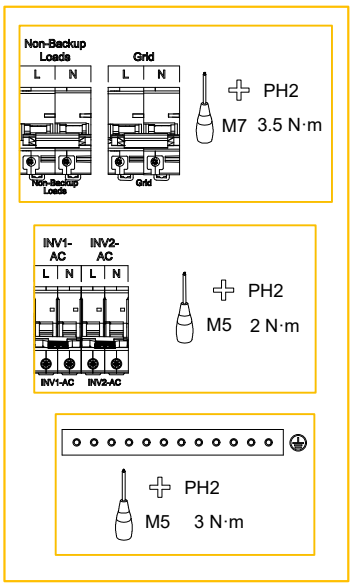

4.5.3 Electrical Connection of Communication Board

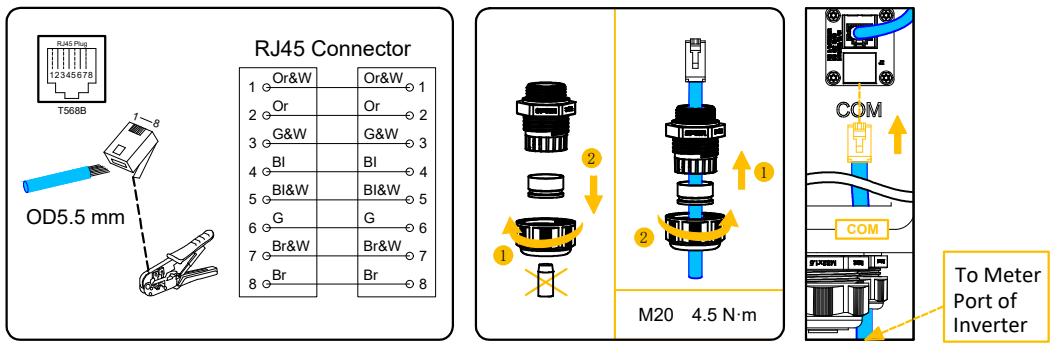

4.5.4 (Optional) Back Cable Entry

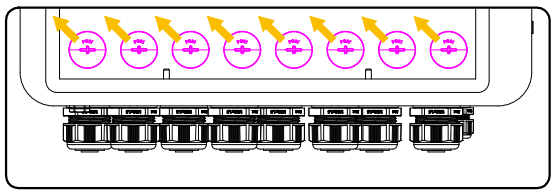

Back wiring steps:

1. Remove the back Nylon Screw Plugs.
2. Thread the wiring harness into the chassis through the rear opening.
3. Complete the wiring according to the internal wiring method mentioned above.
4. Fill the pores with fireproof mud to ensure the sealing inside the box.

* PV INV and COM wiring harness are threaded through one hole.

CAUTION

Color codes of the cables in the picture are only used to identify different types of cables. Please choose the appropriate wire according to local laws and regulations.
If the seal is damaged or cannot be sealed after threading, fireproof sealant must be used for sealing.

5.0 Power-ON / OFF

DANGER

Do not operate the device while it is powered on. Before operation, please ensure that all power sources of the equipment, including but not limited to the grid side, inverter, and generator power switches, have been disconnected.

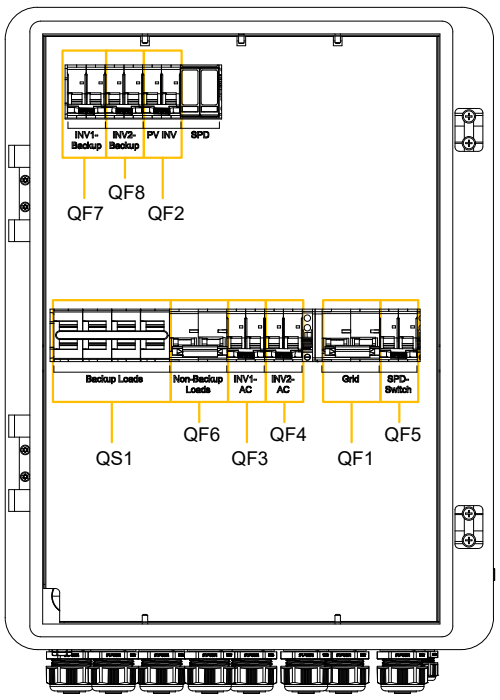

CAUTION

If Backup Box is not grounded, there is a risk of electric shock.
If the surge protector is not turned on, the failure of surge protection may cause damage to household loads and Backup Box.

5.1 Power-on procedure:

1. Turn on the circuit breaker QF5(SPD switch).
2. Turn on the circuit breaker QF1(connecting to the power grid).
3. Turn on the circuit breaker QF2(connecting to a PV inverter).
4. Turn on the circuit breaker QF3 or QF4(connecting to an inverter AC port), wait until inverter is powered on.
5. Turn on the circuit breaker QF7 or QF8(connecting to an inverter Backup port).
6. Turn on the circuit breaker QS1(connecting to Backup loads).
7. Turn on the circuit breaker QF6(connecting to Non-Backup loads).

5.2 Power-off procedure:

1. Turn off the circuit breaker QF6(connecting to Non-Backup loads).
2. Turn off the circuit breaker QS1(connecting to Backup loads).
4. Turn off the circuit breaker QF7 or QF8(connecting to an inverter Backup port).
5. Turn off the circuit breaker QF3 or QF4(connecting to an inverter AC port), wait until inverter is powered off.
6. Turn off the circuit breaker QF2(connecting to a PV inverter).
7. Turn off the circuit breaker QF1(connecting to the power grid).
8. Turn off the circuit breaker QF5(SPD switch).